Vision & Control GmbH
Phone: +49 36 81 / 79 74 11
www.vision-control.com

vicolux® Telecentric Light - TZB235-F250-G520-P-SL

Short description: Telecentric light, green, LF diameter: 235 mm, P-LED, smart light, meas.

Order number: 1-33-666



Characteristics

- flashable telecentric LED lighting - parallel (collimated) beam path
- for flashing during inspection of moving objects
- for optical measurement technology for the targeted highlighting of edges and surface structures in transmitted and incident light;
  for the detection of inclusions and defects in transparent materials such as gemstones
- ideal as backlight in combination with telecentric lenses
- low divergence, high light output
- safe operation due to vicolux® smart light Controller (e.g. DLC3005)
- connection: M8 plug on the casing
- diverse attachment options and extensive accessories

Vision & Control GmbH
Phone: +49 36 81 / 79 74 11
www.vision-control.com

Technical data

Light-emitting surface	Diameter: 235 mm
Light design	Telecentric
Light colour (typ.)	Green, G520
Special feature	Flashable with flash controller
Housing material	Aluminium, black anodised
Optical material	Plastic (Fresnel lens) and glass
Weight	3985 g
Degree of protection	IP 50
Safety class	Class III, safety extra low voltage (SELV)
Ambient temperature	0 °C ... 45 °C
[1]	at a working distance of 200 mm
[2]	at 11 mrad
[3]	bei 1.7 mrad

Notices

The lighting can only be operated in conjunction with a lighting controller or a suitable current source.
vicolux® smart light lighting controllers limit the electrical parameters automatically and also monitor the temperature of the device.

Can be combined with

Order number	Title	Description
TL250 series		
2-06-220	TL230/15.6-250-V-B-LW	Telecentr. large field lens, C-mount, sensor opt. 1", variable aperture, for blue
2-06-221	TL230/15.6-250-V-R-LW	Telecentr. large field lens, C-mount, sensor opt. 1", variable aperture, for red
2-06-222	TL230/15.6-250-V-N-LW	Telecentr. large field lens, C-mount, sensor opt. 1", variable aperture, for near IR
LED Controller DLC3005		
1-30-202	DLC3005	LED lighting controller, digital, cont./flash current: 4.8A/18A, wall mounting
1-30-209	DLC3005-R	LED lighting controller, digital, cont./flash current: 4.8A/18A, DIN rail mounting

Accessories for Telecentric lights - TZB235-F250-G520-P-SL

Order number	Title	Description
Connection cable M8-4pin		
1-11-611	Cable-M8-4p-5A-straight-1m	4x0.5mm², 5A, 30V, PUR, IP67, M8-4pin straight socket to free cable end
1-11-612	Cable-M8-4p-5A-straight-2m	4x0.5mm², 5A, 30V, PUR, IP67, M8-4pin straight socket to free cable end
1-11-613	Cable-M8-4p-5A-straight-3m	4x0.5mm², 5A, 30V, PUR, IP67, M8-4pin straight socket to free cable end
1-11-614	Cable-M8-4p-5A-straight-5m	4x0.5mm², 5A, 30V, PUR, IP67, M8-4pin straight socket to free cable end
1-11-609	Cable-M8-4p-4A-straight-5m	4x0.25mm², 4A, 60V, PUR, IP67, M8-4pin straight socket to free cable end
1-11-607	Cable-M8-4p-4A-straight-10m	4x0.25mm², 4A, 60V, PUR, IP67, M8-4pin straight socket to free cable end
1-11-605	Cable-M8-4p-4A-angled-2m	4x0.25mm², 4A, 60V, PUR, IP67, M8-4pin angled socket to free cable end

Vision & Control GmbH
Phone: +49 36 81 / 79 74 11
www.vision-control.com

Order number	Title	Description
1-11-604	Cable-M8-4p-4A-angled-5m	4x0.25mm², 4A, 60V, PUR, IP67, M8-4pin angled socket to free cable end
1-11-606	Cable-M8-4p-4A-angled-10m	4x0.25mm², 4A, 60V, PUR, IP67, M8-4pin angled socket to free cable end
Extension cable M8-4pin		
1-11-093	Extension cable-M8-4p-5A-0.6m	4x0.5mm², 5A, 30V, PUR, IP67, M8-4pin straight socket to M8-4pin straight plug
1-11-094	Extension cable-M8-4p-5A-1.5m	4x0.5mm², 5A, 30V, PUR, IP67, M8-4pin straight socket to M8-4pin straight plug
1-11-095	Extension cable-M8-4p-5A-3.0m	4x0.5mm², 5A, 30V, PUR, IP67, M8-4pin straight socket to M8-4pin straight plug

Drawings

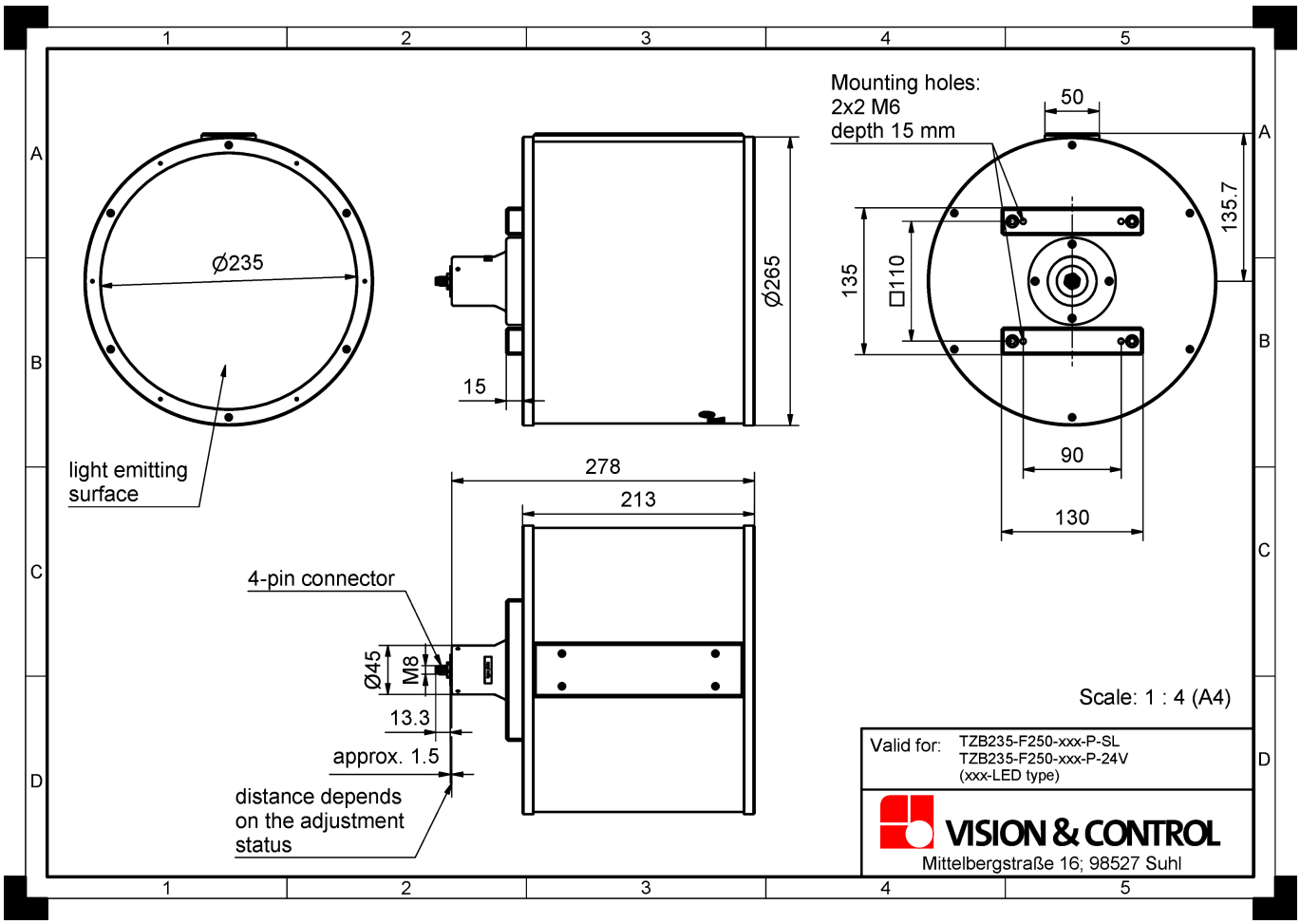

Dimensional drawing in mm

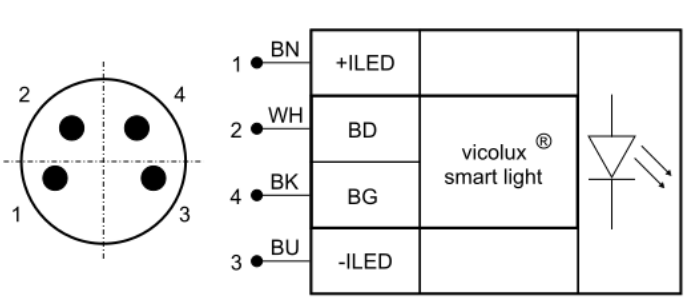

Pin	Core colour	Signal	Description
1	BN (brown)	+ILED	LED anode, positive current input
2	WH (white)	BD	Data Channel for vicolux® smart light modules (1)
4	BK (black)	BG	Data Channel for vicolux® smart light modules (1)
3	BU (blue)	-ILED	LED cathode, negative current input

(1) Only use in conjunction with vicolux® smart light lighting controllers.

Pin assignment: M8 connector