Vision & Control GmbH
Phone: +49 36 81 / 79 74 11
www.vision-control.com

vicolux® Telecentric Light - TZB235-F300-R630-P-24V

Short description: Telecentric light, red, LF diameter: 235 mm, P-LED, 24V, measurement

Order number: 1-33-659



Characteristics

- telecentric LED lighting - parallel (collimated) beam path
- specially developed for optical measurement technology;
  also suitable for the targeted highlighting of edges and surface structures in transmitted light
- ideal as backlight in combination with telecentric lenses
- very low divergence
- lighting controller integrated in the housing - brightness pre-set
- connection: M8 plug on the casing
- diverse attachment options and extensive accessories

Vision & Control GmbH
Phone: +49 36 81 / 79 74 11
www.vision-control.com

Technical data

Light-emitting surface	Diameter: 235 mm
Light design	Telecentric
Light colour (typ.)	Red, R630
Operating mode	Continuous operation Switching operation
Operation voltage	24 VDC (19V ... 29V)
Housing material	Aluminium, black anodised
Optical material	Plastic (Fresnel lens) and glass
Weight	4289 g
Degree of protection	IP 50
Safety class	Class III, safety extra low voltage (SELV)
Ambient temperature	0 °C ... 45 °C
[1]	at a working distance of 200 mm
[2]	at 11 mrad

Can be combined with

Order number	Title	Description
TL250 series		
2-06-220	TL230/15.6-250-V-B-LW	Telecentr. large field lens, C-mount, sensor opt. 1", variable aperture, for blue
2-06-221	TL230/15.6-250-V-R-LW	Telecentr. large field lens, C-mount, sensor opt. 1", variable aperture, for red
2-06-222	TL230/15.6-250-V-N-LW	Telecentr. large field lens, C-mount, sensor opt. 1", variable aperture, for near IR

Accessories for Telecentric lights - TZB235-F300-R630-P-24V

Order number	Title	Description
Connection cable M8-4pin		
1-11-611	Cable-M8-4p-5A-straight-1m	4x0.5mm², 5A, 30V, PUR, IP67, M8-4pin straight socket to free cable end
1-11-612	Cable-M8-4p-5A-straight-2m	4x0.5mm², 5A, 30V, PUR, IP67, M8-4pin straight socket to free cable end
1-11-613	Cable-M8-4p-5A-straight-3m	4x0.5mm², 5A, 30V, PUR, IP67, M8-4pin straight socket to free cable end
1-11-614	Cable-M8-4p-5A-straight-5m	4x0.5mm², 5A, 30V, PUR, IP67, M8-4pin straight socket to free cable end
1-11-609	Cable-M8-4p-4A-straight-5m	4x0.25mm², 4A, 60V, PUR, IP67, M8-4pin straight socket to free cable end
1-11-607	Cable-M8-4p-4A-straight-10m	4x0.25mm², 4A, 60V, PUR, IP67, M8-4pin straight socket to free cable end
1-11-605	Cable-M8-4p-4A-angled-2m	4x0.25mm², 4A, 60V, PUR, IP67, M8-4pin angled socket to free cable end
1-11-604	Cable-M8-4p-4A-angled-5m	4x0.25mm², 4A, 60V, PUR, IP67, M8-4pin angled socket to free cable end
1-11-606	Cable-M8-4p-4A-angled-10m	4x0.25mm², 4A, 60V, PUR, IP67, M8-4pin angled socket to free cable end
Extension cable M8-4pin		

Vision & Control GmbH
Phone: +49 36 81 / 79 74 11
www.vision-control.com

Order number	Title	Description
1-11-093	Extension cable-M8-4p-5A-0.6m	4x0.5mm², 5A, 30V, PUR, IP67, M8-4pin straight socket to M8-4pin straight plug
1-11-094	Extension cable-M8-4p-5A-1.5m	4x0.5mm², 5A, 30V, PUR, IP67, M8-4pin straight socket to M8-4pin straight plug
1-11-095	Extension cable-M8-4p-5A-3.0m	4x0.5mm², 5A, 30V, PUR, IP67, M8-4pin straight socket to M8-4pin straight plug
Power supply		
4-40-218	Power supply 24V-120W-5A	for DIN rail mounting, without connection cable, type: SDR-120-24

Drawings

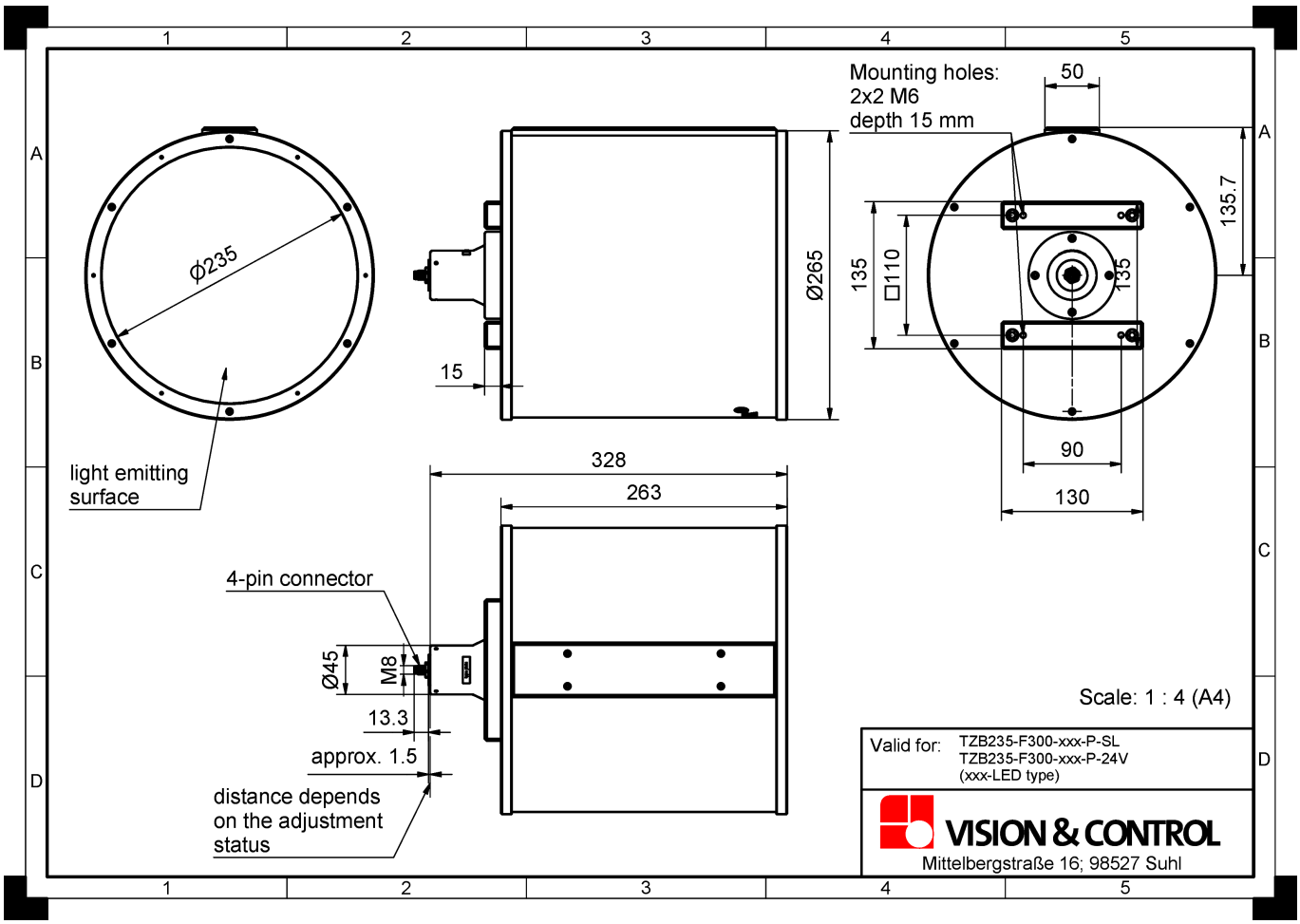

Dimensional drawing in mm

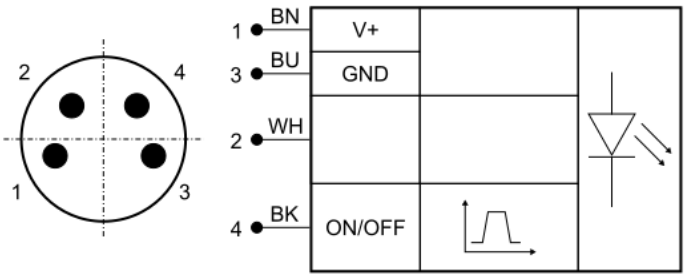

Pin	Core colour	Signal	Description
1	BN (brown)	V+	Operating voltage
2	WH (white)	NC	Do not use
3	BU (blue)	GND	Ground
4	BK (black)	ON/OFF	Switch input

Pin assignment: M8 connector