Vision & Control GmbH
Phone: +49 36 81 / 79 74 11
www.vision-control.com

vicolux® Telecentric Light - TZB48-R630-P-SL

Short description: Telecentric light, red, LF diameter: 48 mm, P-LED, smart light, meas.

Order number: 1-33-569



Characteristics

- flashable telecentric LED lighting - parallel (collimated) beam path
- for flashing during inspection of moving objects
- for optical measurement technology for the targeted highlighting of edges and surface structures in transmitted and incident light;
  for the detection of inclusions and defects in transparent materials such as gemstones
- ideal as backlight in combination with telecentric lenses
- low divergence, high light output
- safe operation due to vicolux® smart light Controller (e.g. DLC3005)
- connection: M8 plug on the casing
- diverse attachment options and extensive accessories

Vision & Control GmbH
Phone: +49 36 81 / 79 74 11
www.vision-control.com

Technical data

Light-emitting surface	Diameter: 48 mm
Light design	Telecentric
Light colour (typ.)	Red, 630 nm
Special feature	Flashable with flash controller
Housing material	Aluminium, black anodised
Optical material	Glass
Filter thread	M42 x 0.75
Weight	395 g
Degree of protection	IP 50
Safety class	Class III, safety extra low voltage (SELV)
Ambient temperature	0 °C ... 45 °C
[1]	at a working distance of 200 mm
[2]	at 11 mrad
[3]	bei 1.7 mrad

Notices

The lighting can only be operated in conjunction with a lighting controller or a suitable current source.
vicolux® smart light lighting controllers limit the electrical parameters automatically and also monitor the temperature of the device.

Can be combined with

Order number	Title	Description
TO42 series		
2-05-624	TO42/16.0-120-V-BW	Telecentric Lens, C-mount, Sensor opt. 1", aperture F8 - F22, blue
2-05-648	TO42/16.4-232-V-LD	Telecentric Lens, C-Mount, Sensor opt. 1", aperture F6 - F22, long distan
2-05-626	TO42/21.4-120-V-BW	Telecentric Lens, C-Mount, Sensor opt. Typ 4/3, aperture F8 - F22, blue
2-05-627	TO42/28.3-100-V-BW	Telecentric Lens, M42, Sensor opt. "Type DX", aperture F10 - F22, blue
TO44 series		
2-05-621	TO44/6.2-150-V-BW	Telecentric Lens, C-mount, Sensor opt. 1/3", aperture F6 - F22, blue
2-05-622	TO44/8.8-110-V-BW	Telecentric Lens, C-mount, Sensor opt. 1/1,8", aperture F6 - F22, blue
2-05-623	TO44/11.0-110-V-BW	Telecentric Lens, C-mount, Sensor opt. 2/3", aperture F8 - F22, blue
TOB42 series		
2-05-602	TOB42/11.0-145-V-WN	Bi-Telecentric Lens, C-mount, sensor opt. 2/3", aperture F6 - F22, W/NIR
2-05-605	TOB42/11.0-145-F16-WN	Bi-Telecentric Lens, C-mount, sensor opt. 2/3", aperture F16, W/NIR
2-05-608	TOB42/11.0-145-F10-WN	Bi-Telecentric Lens, C-mount, sensor opt. 2/3", aperture F10, W/NIR
2-05-601	TOB42/11.0-165-V-WN	Bi-Telecentric Lens, C-mount, sensor opt. 2/3", aperture F6 - F22, W/NIR
2-05-604	TOB42/11.0-165-F16-WN	Bi-Telecentric Lens, C-mount, sensor opt. 2/3", aperture F16, W/NIR
2-05-607	TOB42/11.0-165-F10-WN	Bi-Telecentric Lens, C-mount, sensor opt. 2/3", aperture F10, W/NIR
2-05-600	TOB42/11.0-185-V-WN	Bi-Telecentric Lens, C-mount, sensor opt. 2/3", aperture F6 - F22, W/NIR
2-05-603	TOB42/11.0-185-F16-WN	Bi-Telecentric Lens, C-mount, sensor opt. 2/3", aperture F16, W/NIR

Order number	Title	Description
2-05-606	TOB42/11.0-185-F10-WN	Bi-Telecentric Lens, C-mount, sensor opt. 2/3", aperture F10, W/NIR
TO44-LD series		
2-05-425	TO44/8.1-302-V-WN-LD	Telecentric measuring lens, c-mount, sensor opt. 1/2", variable aperture, VIS/NIR, LD
2-05-391	TO44/7.5-287-V-LD	Telecentric lens, c-mount, sensor opt. 1/2", variable aperture, VIS/NIR, LD
LED Controller DLC3005		
1-30-202	DLC3005	LED lighting controller, digital, cont./flash current: 4.8A/18A, wall mounting
1-30-209	DLC3005-R	LED lighting controller, digital, cont./flash current: 4.8A/18A, DIN rail mounting

Accessories for Telecentric lights - TZB48-R630-P-SL

Order number	Title	Description
Lens mount		
2-91-333	Mounting plate SH	Holder for telecentric lenses and lightings with with slotted hole for M4-M6
2-90-139	Lens Holder d45	Holder for telecentric lenses and lightings with d = 45 mm
2-91-330	Lens Holder d45 wide	Holder for telecentric lenses and lightings with d = 45 mm, width = 32 mm
Polarising filters		
2-91-144	Pole filter M52x0.75	linear polarizing filter, range 420 nm - 780 nm, filter thread M52x0.75
Deflection mirrow 90° series		
2-25-115	Deflection mirror 90-56	90° deflection, attachment for telecentric lenses and lightings with d = 56 mm
Beam splitter STE60x60		
1-20-050	STE60x60-VIS	Beam splitter unit for coaxial light system, optimized for 450-700 nm

Order number	Title	Description
1-20-022	Adapter STE60x60 - TZO56	Attachment of the STE60x60 to telecentric lenses and lightings with d = 56mm
Connection cable M8-4pin		
1-11-611	Cable-M8-4p-5A-straight-1m	4x0.5mm², 5A, 30V, PUR, IP67, M8-4pin straight socket to free cable end
1-11-612	Cable-M8-4p-5A-straight-2m	4x0.5mm², 5A, 30V, PUR, IP67, M8-4pin straight socket to free cable end
1-11-613	Cable-M8-4p-5A-straight-3m	4x0.5mm², 5A, 30V, PUR, IP67, M8-4pin straight socket to free cable end
1-11-614	Cable-M8-4p-5A-straight-5m	4x0.5mm², 5A, 30V, PUR, IP67, M8-4pin straight socket to free cable end
1-11-609	Cable-M8-4p-4A-straight-5m	4x0.25mm², 4A, 60V, PUR, IP67, M8-4pin straight socket to free cable end
1-11-607	Cable-M8-4p-4A-straight-10m	4x0.25mm², 4A, 60V, PUR, IP67, M8-4pin straight socket to free cable end
1-11-605	Cable-M8-4p-4A-angled-2m	4x0.25mm², 4A, 60V, PUR, IP67, M8-4pin angled socket to free cable end
1-11-604	Cable-M8-4p-4A-angled-5m	4x0.25mm², 4A, 60V, PUR, IP67, M8-4pin angled socket to free cable end
1-11-606	Cable-M8-4p-4A-angled-10m	4x0.25mm², 4A, 60V, PUR, IP67, M8-4pin angled socket to free cable end
Extension cable M8-4pin		
1-11-093	Extension cable-M8-4p-5A-0.6m	4x0.5mm², 5A, 30V, PUR, IP67, M8-4pin straight socket to M8-4pin straight plug
1-11-094	Extension cable-M8-4p-5A-1.5m	4x0.5mm², 5A, 30V, PUR, IP67, M8-4pin straight socket to M8-4pin straight plug
1-11-095	Extension cable-M8-4p-5A-3.0m	4x0.5mm², 5A, 30V, PUR, IP67, M8-4pin straight socket to M8-4pin straight plug

Drawings

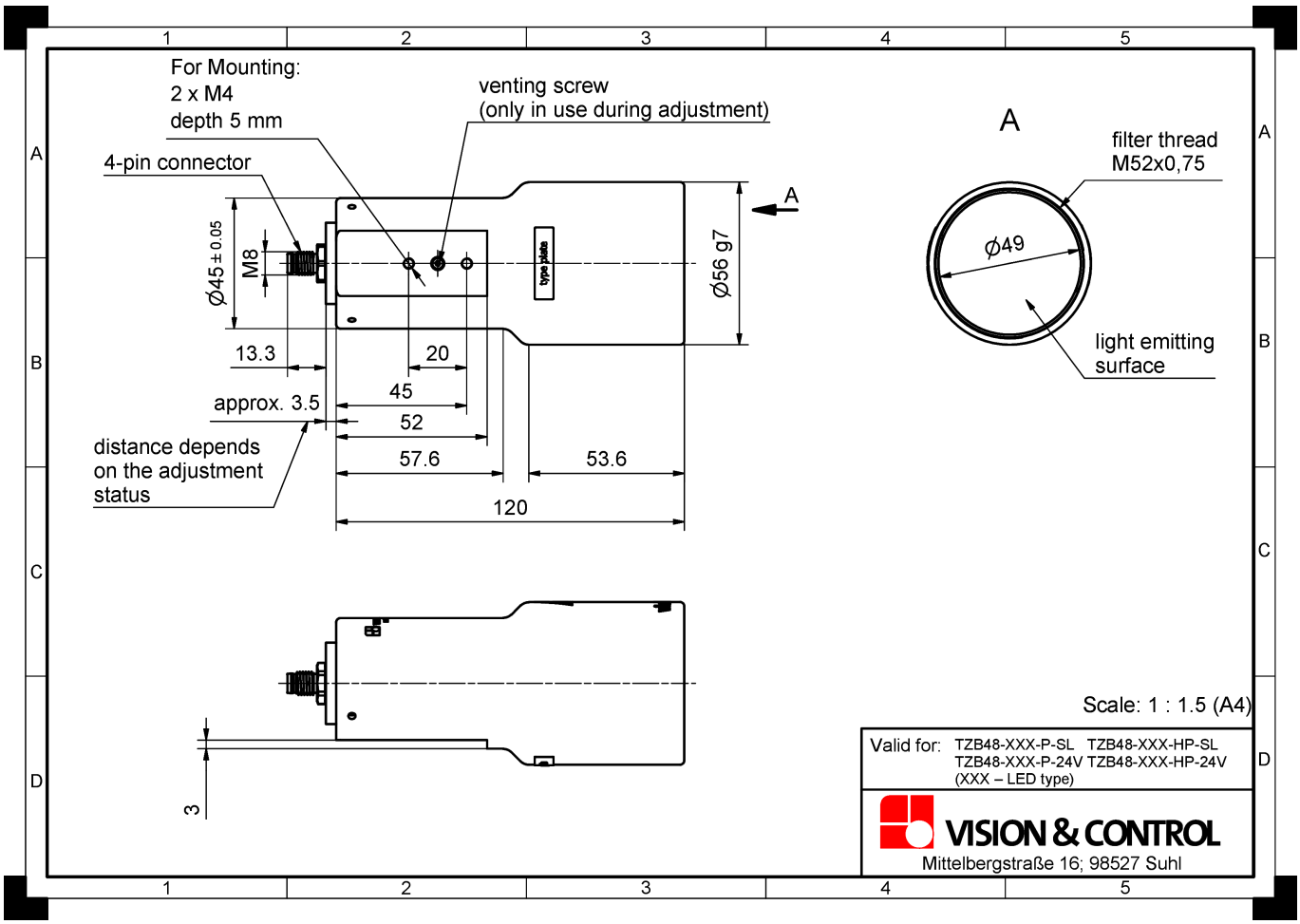

Dimensional drawing in mm

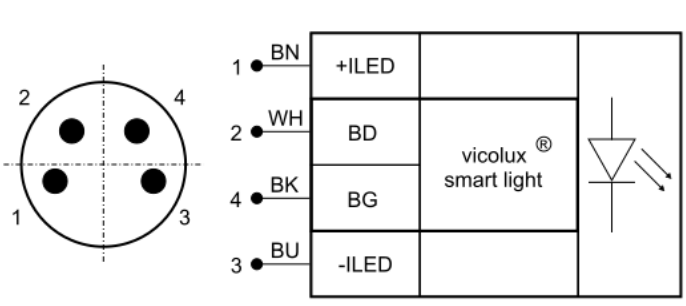

Pin	Core colour	Signal	Description
1	BN (brown)	+ILED	LED anode, positive current input
2	WH (white)	BD	Data Channel for vicolux® smart light modules (1)
4	BK (black)	BG	Data Channel for vicolux® smart light modules (1)
3	BU (blue)	-ILED	LED cathode, negative current input

(1) Only use in conjunction with vicolux® smart light lighting controllers.

Pin assignment: M8 connector