Vision & Control GmbH
Phone: +49 36 81 / 79 74 11
www.vision-control.com

vicolux® Telecentric Light - TZB48-G520-P-24V

Short description: Telecentric light, green, LF diameter: 48 mm, P-LED, 24V, measurement

Order number: 1-33-564



Characteristics

- telecentric LED lighting - parallel (collimated) beam path
- for the detection of inclusions and defects in transparent materials such as gemstones also suitable for the targeted highlighting of edges and surface structures in incident light
- ideal as backlight in combination with telecentric lenses
- low divergence, high light output
- lighting controller integrated in the housing - brightness pre-set
- connection: M8 plug on the casing
- diverse attachment options and extensive accessories

Vision & Control GmbH
Phone: +49 36 81 / 79 74 11
www.vision-control.com

Technical data

Light-emitting surface	Diameter: 48 mm
Light design	Telecentric
Light colour (typ.)	Green, 520 nm
Operating mode	Continuous operation Switching operation
Operation voltage	24 VDC (19V ... 29V)
Housing material	Aluminium, black anodised
Optical material	glass
Filter thread	M42 x 0.75
Weight	395 g
Degree of protection	IP 50
Safety class	Class III, safety extra low voltage (SELV)
Ambient temperature	0 °C ... 45 °C
[1]	at a working distance of 200 mm
[2]	at 11 mrad

Can be combined with

Order number	Title	Description
TO42 series		
2-05-624	TO42/16.0-120-V-BW	Telecentric Lens, C-mount, Sensor opt. 1", aperture F8 - F22, blue
2-05-648	TO42/16.4-232-V-LD	Telecentric Lens, C-Mount, Sensor opt. 1", aperture F6 - F22, long distan
2-05-626	TO42/21.4-120-V-BW	Telecentric Lens, C-Mount, Sensor opt. Typ 4/3, aperture F8 - F22, blue
2-05-627	TO42/28.3-100-V-BW	Telecentric Lens, M42, Sensor opt. "Type DX", aperture F10 - F22, blue
TO44 series		
2-05-621	TO44/6.2-150-V-BW	Telecentric Lens, C-mount, Sensor opt. 1/3", aperture F6 - F22, blue
2-05-622	TO44/8.8-110-V-BW	Telecentric Lens, C-mount, Sensor opt. 1/1,8", aperture F6 - F22, blue
2-05-623	TO44/11.0-110-V-BW	Telecentric Lens, C-mount, Sensor opt. 2/3", aperture F8 - F22, blue
TOB42 series		
2-05-602	TOB42/11.0-145-V-WN	Bi-Telecentric Lens, C-mount, sensor opt. 2/3", aperture F6 - F22, W/NIR
2-05-605	TOB42/11.0-145-F16-WN	Bi-Telecentric Lens, C-mount, sensor opt. 2/3", aperture F16, W/NIR
2-05-608	TOB42/11.0-145-F10-WN	Bi-Telecentric Lens, C-mount, sensor opt. 2/3", aperture F10, W/NIR
2-05-601	TOB42/11.0-165-V-WN	Bi-Telecentric Lens, C-mount, sensor opt. 2/3", aperture F6 - F22, W/NIR
2-05-604	TOB42/11.0-165-F16-WN	Bi-Telecentric Lens, C-mount, sensor opt. 2/3", aperture F16, W/NIR
2-05-607	TOB42/11.0-165-F10-WN	Bi-Telecentric Lens, C-mount, sensor opt. 2/3", aperture F10, W/NIR
2-05-600	TOB42/11.0-185-V-WN	Bi-Telecentric Lens, C-mount, sensor opt. 2/3", aperture F6 - F22, W/NIR
2-05-603	TOB42/11.0-185-F16-WN	Bi-Telecentric Lens, C-mount, sensor opt. 2/3", aperture F16, W/NIR

Order number	Title	Description
2-05-606	TOB42/11.0-185-F10-WN	Bi-Telecentric Lens, C-mount, sensor opt. 2/3", aperture F10, W/NIR
TO44-LD series		
2-05-391	TO44/7.5-287-V-LD	Telecentric lens, c-mount, sensor opt. 1/2", variable aperture, VIS/NIR, LD
2-05-425	TO44/8.1-302-V-WN-LD	Telecentric measuring lens, c-mount, sensor opt. 1/2", variable aperture, VIS/NIR, LD

Accessories for Telecentric lights - TZB48-G520-P-24V

Order number	Title	Description
Lens mount		
2-91-333	Mounting plate SH	Holder for telecentric lenses and lightings with with slotted hole for M4-M6
2-90-139	Lens Holder d45	Holder for telecentric lenses and lightings with d = 45 mm
2-91-330	Lens Holder d45 wide	Holder for telecentric lenses and lightings with d = 45 mm, width = 32 mm
Polarising filters		
2-91-144	Pole filter M52x0.75	linear polarizing filter, range 420 nm - 780 nm, filter thread M52x0.75
Deflection mirrow 90° series		
2-25-115	Deflection mirror 90-56	90° deflection, attachment for telecentric lenses and lightings with d = 56 mm
Beam splitter STE60x60		
1-20-050	STE60x60-VIS	Beam splitter unit for coaxial light system, optimized for 450-700 nm
1-20-022	Adapter STE60x60 - TZO56	Attachment of the STE60x60 to telecentric lenses and lightings with d = 56mm
Connection cable M8-4pin		
1-11-611	Cable-M8-4p-5A-straight-1m	4x0.5mm², 5A, 30V, PUR, IP67, M8-4pin straight socket to free cable end

Order number	Title	Description
1-11-612	Cable-M8-4p-5A-straight-2m	4x0.5mm², 5A, 30V, PUR, IP67, M8-4pin straight socket to free cable end
1-11-613	Cable-M8-4p-5A-straight-3m	4x0.5mm², 5A, 30V, PUR, IP67, M8-4pin straight socket to free cable end
1-11-614	Cable-M8-4p-5A-straight-5m	4x0.5mm², 5A, 30V, PUR, IP67, M8-4pin straight socket to free cable end
1-11-609	Cable-M8-4p-4A-straight-5m	4x0.25mm², 4A, 60V, PUR, IP67, M8-4pin straight socket to free cable end
1-11-607	Cable-M8-4p-4A-straight-10m	4x0.25mm², 4A, 60V, PUR, IP67, M8-4pin straight socket to free cable end
1-11-605	Cable-M8-4p-4A-angled-2m	4x0.25mm², 4A, 60V, PUR, IP67, M8-4pin angled socket to free cable end
1-11-604	Cable-M8-4p-4A-angled-5m	4x0.25mm², 4A, 60V, PUR, IP67, M8-4pin angled socket to free cable end
1-11-606	Cable-M8-4p-4A-angled-10m	4x0.25mm², 4A, 60V, PUR, IP67, M8-4pin angled socket to free cable end
Extension cable M8-4pin		
1-11-093	Extension cable-M8-4p-5A-0.6m	4x0.5mm², 5A, 30V, PUR, IP67, M8-4pin straight socket to M8-4pin straight plug
1-11-094	Extension cable-M8-4p-5A-1.5m	4x0.5mm², 5A, 30V, PUR, IP67, M8-4pin straight socket to M8-4pin straight plug
1-11-095	Extension cable-M8-4p-5A-3.0m	4x0.5mm², 5A, 30V, PUR, IP67, M8-4pin straight socket to M8-4pin straight plug
Power supply		
4-40-218	Power supply 24V-120W-5A	for DIN rail mounting, without connection cable, type: SDR-120-24

Drawings

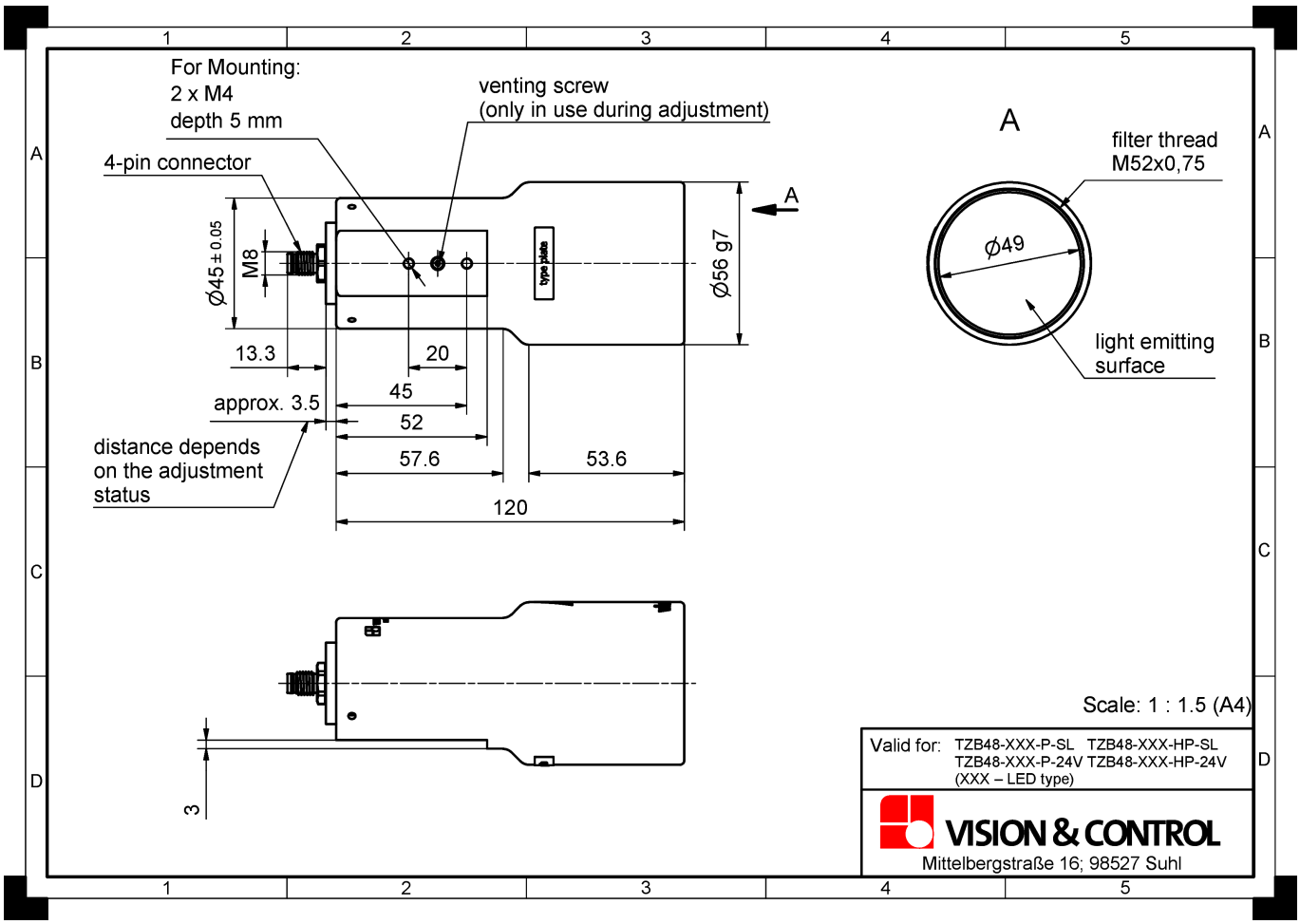

Dimensional drawing in mm

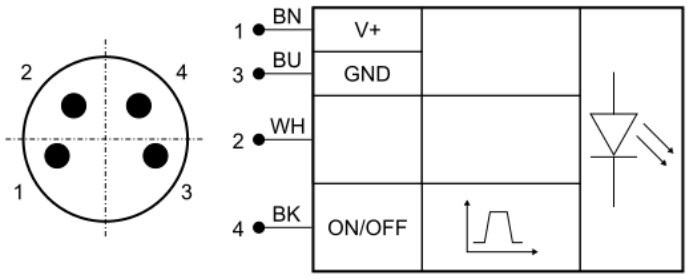

Pin	Core colour	Signal	Description
1	BN (brown)	V+	Operating voltage
2	WH (white)	NC	Do not use
3	BU (blue)	GND	Ground
4	BK (black)	ON/OFF	Switch input

Pin assignment: M8 connector