Vision & Control GmbH
Phone: +49 36 81 / 79 74 11
www.vision-control.com

vicolux® Ring Light - RK613-IR850-24V/C- Diameter of luminous field 13/23 mm

Short description: ring light, IR850, coaxial, lf diameter: 13/23 mm, controlled/switchable

Order number: 1-29-104

EAN: 4251692644034

Characteristics

- LED ring light with direct illumination for direct mounting on M12 lenses
- homogeneous illumination
- lighting controller integrated in casing
- continuous or pulsed operation
- pulse-length and brightness adjustable
- connection: cable with open ends
- robust metal casing, protection class IP67
- extensive optics and mounting accessories available

Vision & Control GmbH
Phone: +49 36 81 / 79 74 11
www.vision-control.com

Technical data

Light-emitting surface	Inner diameter: 13 mm Outer diameter: 23 mm
Light colour	Infrared, 850 nm
Power supply	24 VDC (18 -30 V)
Continuous operation	
• Irradiance	98 W/m²
Housing material	Aluminium, black anodised
Optical material	LED, moulded
Weight	15 g
Degree of protection	IP67
Safety class	Class III, safety extra low voltage (SELV)
Risk group (DIN EN 62471)	Freie Gruppe
Ambient temperature	0 °C ... +45 °C

Vision & Control GmbH
Phone: +49 36 81 / 79 74 11
www.vision-control.com

Accessories for Ring lights - RK613-IR850-24V/C

Order number	Title	Description
Attachment ring		
1-29-150	Attachment ring M25.5x0.5	for RK613, for attachment of beam shaping optics
Diffusers		
1-29-172	Diffuser 40% d23	for RK613, usable with attachment ring M25.5x0.5 (Best.Nr.: 1-29-150)
1-29-171	Diffuser 15% d23	for RK613, usable with attachment ring M25.5x0.5 (Best.Nr.: 1-29-150)
Polarisers for Ring Lights		
1-29-170	Polariser linear d23	for RK613, usable with attachment ring M25.5x0.5 (Best.Nr.: 1-29-150)
Focusing and Fresnel lens		
1-29-174	Fresnel lens F50 d23	for RK613, usable with attachment ring M25.5x0.5 (Best.Nr.: 1-29-150)
1-29-175	Fresnel lens F100 d23	for RK613, usable with attachment ring M25.5x0.5 (Best.Nr.: 1-29-150)
1-29-176	Fresnel lens F150 d23	for RK613, usable with attachment ring M25.5x0.5 (Best.Nr.: 1-29-150)
Adapters for attaching lights to lenses		
1-29-153	Adapter ring d14 - M25.5x0.5	for RK613, for attachment to lenses with filter thread M25.5x0.5
1-29-152	Adapter ring d14 - M26x0.5	for RK613, for attachment to lenses with filter thread M26x0.5
1-29-151	Adapter ring d14 - M27x0.5	for RK613, for attachment to lenses with filter thread M27x0.5
1-29-155	Adapter ring d14 - d27	for RK613, for attachment to lenses with clamping diameter 27 mm
1-29-156	Adapter ring d14 - d35.5	for RK613, for attachment to lenses with clamping diameter 35.5 mm
1-29-158	Adapter ring d35.5 - d34	for RK613, for attachment to lenses with clamping diameter 34 mm

Vision & Control GmbH
Phone: +49 36 81 / 79 74 11
www.vision-control.com

Drawings

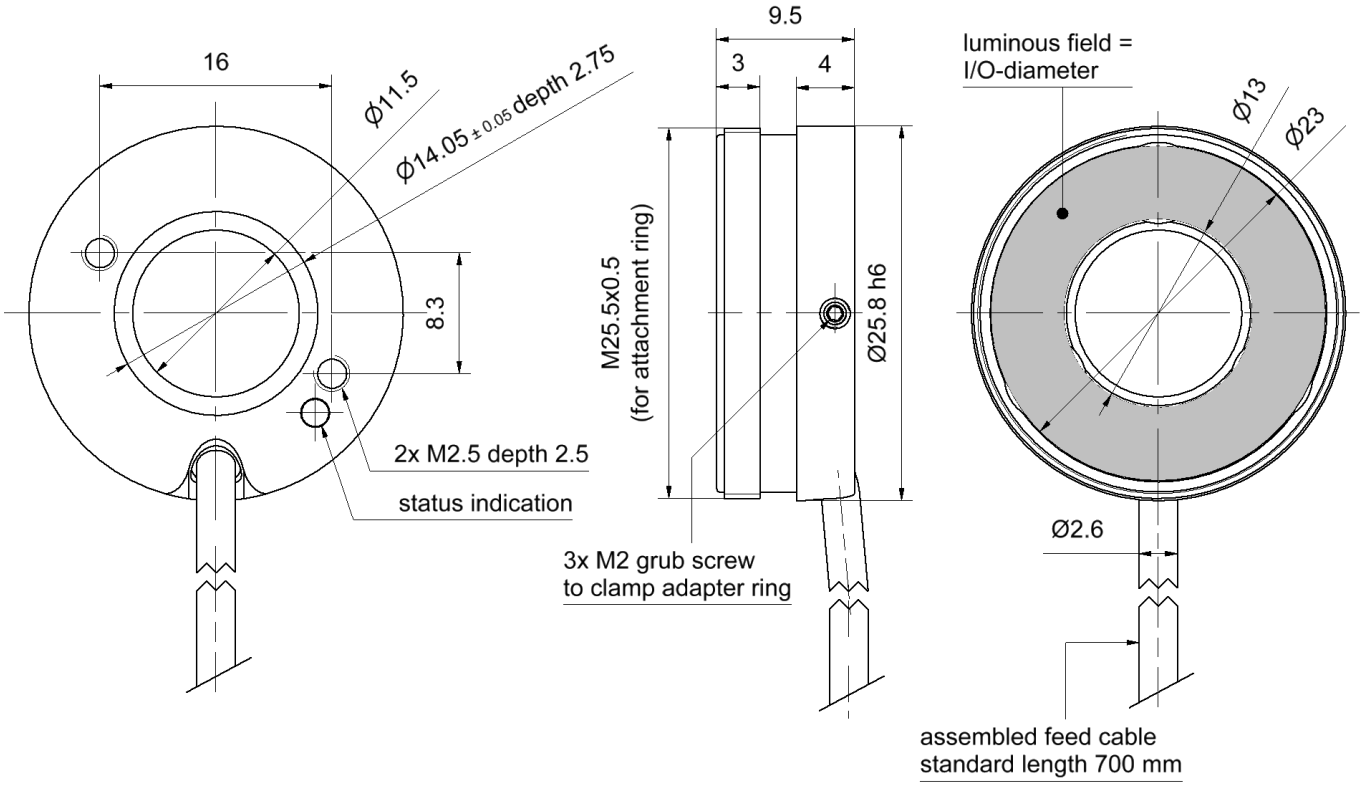

Dimensional drawing in mm

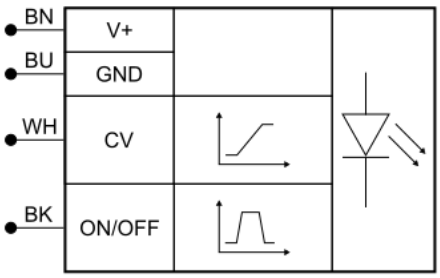

Core colour	Signal	Description
BN (brown)	V+	Operating voltage
BU (blue)	GND	Ground
WH (white)	CV	Control voltage
BK (black)	ON/OFF	Switch input

Pin assignments: free cable end, 4-wire